Current part is item (11) on diagram. Available at www.oshkoshequipment.com

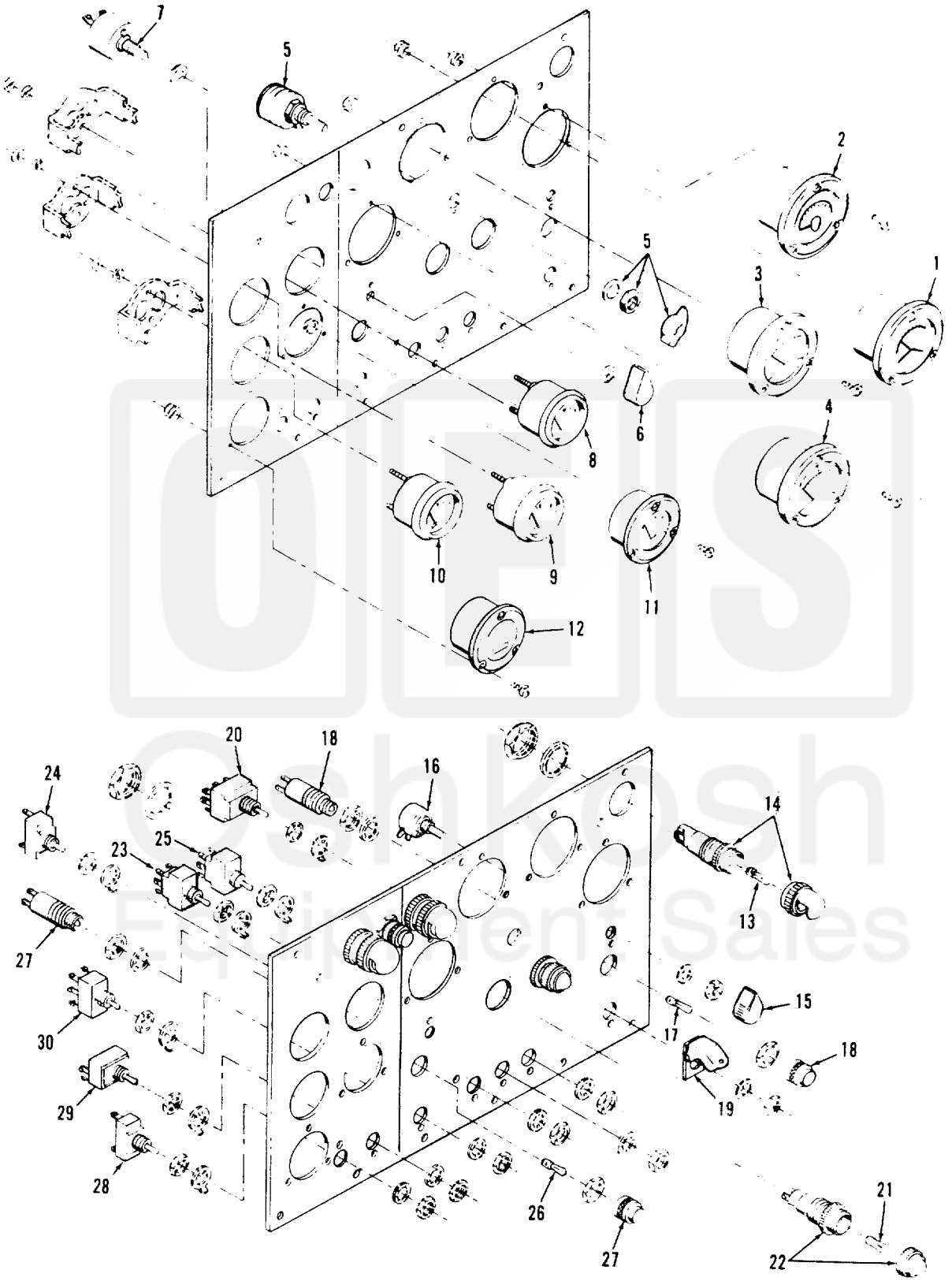

Figure 11. Control Cubicle Assembly (Sheet 1 of 3)

Current part is item (11) on diagram. Available at www.oshkoshequipment.com

Current part is item (11) on diagram. Available at www.oshkoshequipment.com

(1) ILLUSTRATION a FIG NO.	b ITEM NO.	(2) SMR CODE a ARMY	b AIR FORCE	c NAVY	d USMC	(3) USMC a SSI	b REPL FACTOR	(4) NATIONAL STOCK NUMBER	(5) DESCRIPTION REF NUMBER & MFR CODE	USABLE ON CODE	(6) U/M	(7) QTY INC IN UNIT	(8) USMC QTY PER EQUIP
									CONTROL CUBICLE ASSEMBLY, A3				
11	1	PAFZZ	PAFZZ	PAHZZ	PAFZZ	I	.030	6625-00-004-8066	METER, CURRENT, A3M8 637-16750 69-597	 77221 30554	EA	1	1
11	2	PAOZZ	PAFZZ	PAHZZ	PAFZZ	I	.030	6625-00-869-3144	METER, VOLTAGE A3M9 633-16752 69-599	 77221 30554	EA	1	1
11	3	PAOZZ	PAFZZ	PAHZZ	PAFZZ	I	.030	6625-00-003-0975	METER, KILOWATT A3M7 04306-3000 70-4012	 93568 30554	EA	1	1
11	4	XAOZZ	XAFZZ	XAHZZ	XA---	I	.030		METER, FREQUENCY INDICATOR A3M6, PART OF SET 6625-00-003-0971 267841 69-773	 65092 30554	EA	1	1
11	5	PAOZZ	PAFZZ	PAHZZ	PAFZZ	I	.050	5930-00-214-0431	SWITCH, VOLT-AMP-TRANSFER A3S8 31904LT 70-4016	 82121 30554	EA	1	1
11	6	PAOZZ	PAFZZ	XBHZZ	PAFZZ	D	.008	5355-00-916-2060	KNOB, CONTROL MS91528-2P4B	 96906	EA	1	1
11	7	PAOZZ	PAFZZ	PAHZZ	PAFZZ	I	.090	5905-00-665-7855	RHEOSTAT, A3R1 RP111FD501KK 69-571-1	 81349 30554	EA	1	1
11	8	PAOZZ	PAFZZ	PAHZZ	PAFZZ	I	.050	6620-00-857-0662	INDICATOR, TEMPERATURE A3M2 505BE 69-577	 57733 30554	EA	1	1
11	9	PAOZZ	PAFZZ	PAHZZ	PAFZZ	I	.050	6620-00-005-4879	INDICATOR, OIL PRESSURE A3M1 505BD 69-576-2	 57733 30554	EA	1	1
11	10	PAOZZ	PAFZZ	PAHZZ	PAFZZ	I	.050	6680-00-052-3544	INDICATOR, LIQUID QUANTITY A3M3 505BC 69-575	 57733 30554	EA	1	1
11	11	PAOZZ	PAFZZ	PAHZZ	PAFZZ	I	.030	6625-00-869-3141	AMMETER, DC, A3M4 621-16749 69-574	 77221 30554	EA	1	1
11	12	PAOZZ	PAFZZ	PAHZZ	PAFZZ	D	.004	6645-00-089-8842	METER, TIME TOTALIZING A3M5 M3971-1-5	 81349	EA	1	1
11	13	PAOZZ	PAOZZ	PAHZZ	PAOZZ	D	.160	6240-00-155-7878	LAMP, INCANDESCENT, A3DS1, A3DS2, A3DS3 6S6-30V 69-594	 08108 30554	EA	3	3
11	14	PAOZZ	PAFZZ	PAHZZ	PAFZZ	I	.040	6210-00-935-6919	LIGHT, PANEL 47-0901-2900-201 69-593	 72619 30554	EA	3	3
11	15	PAOZZ	PAFZZ	XBHZZ	PAFZZ	D	.008	5355-00-916-2060	KNOB, CONTROL MS91528-2P4B	 96906	EA	1	2
11	16	PAOZZ	PAFZZ	PAHZZ	PAFZZ	I	.090	5905-00-264-7368	RHEOSTAT, A3R2 RP101FD251KK 69-548	 81349 30554	EA	1	1
11	17	PAOZZ	PAOZZ	PAHZZ	PAOZZ	D	.160	6240-00-155-8714	LAMP MS25231-313	 96906	EA	2	5
11	18	PAOZZ	PAFZZ	PAHZZ	PAFZZ	I	.040	6210-00-686-4999	LIGHT ASSY, PRESS TO TEST INDICATOR, RED, A3DS7, A3DS8 MS25331-2	 96906	EA	2	3

Current part is item (11) on diagram. Available at www.oshkoshequipment.com